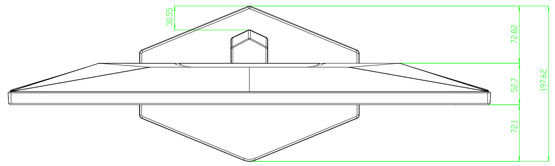

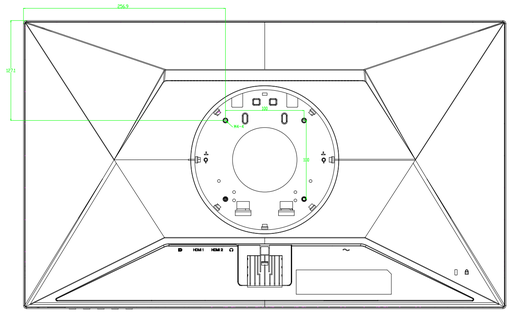

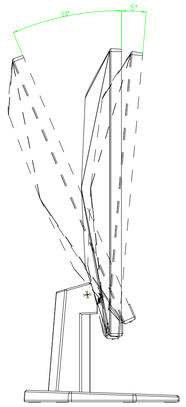

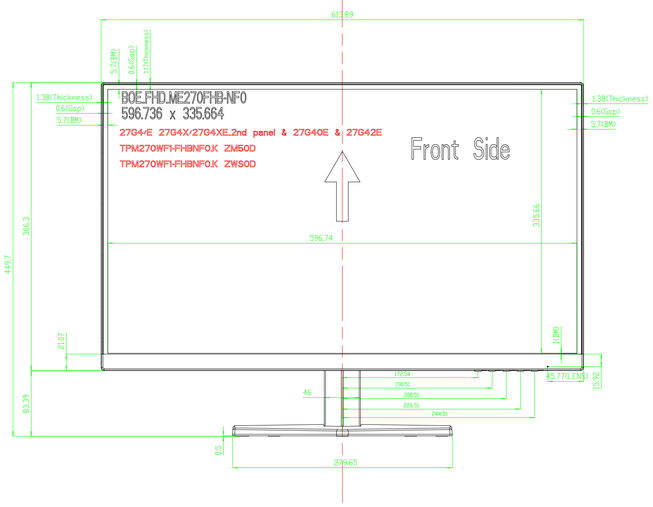

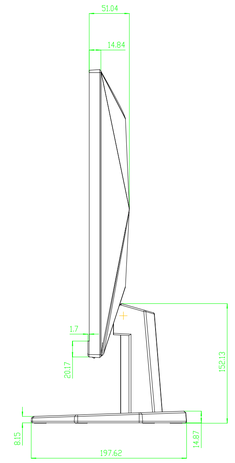

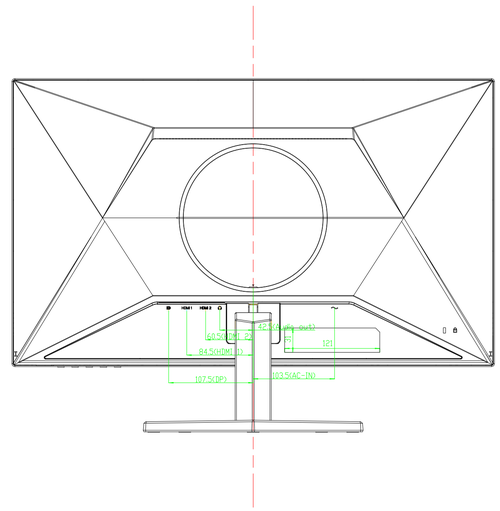

TILT:-5°~23°

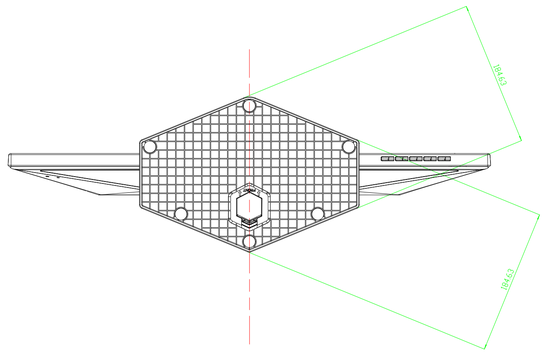

Model: Q27G42ZE		Draw: CL
Unit mm	Q27G42ZE SHT191	
SCALE 1:1	3rd PROJ.	SPEC: 1.Tilt:-5°~23°
SUPERS	AOC	1-1
DATE 12_FEB_2025		TP MNT